Digital Mammography

Mammograph FFDM – Mammograph D-Tomo

Product Data

REV. 7 (October 2017)

Mammograph FFDM is the new Italray solution for clinical mammography (from mammograms to stereotactic biopsy) with the strong improvement of digital imaging.

The system is totally microprocessor controlled and its asymmetry facilitates operator access together with patient control into a small space too.

This new unit is composed of

- Mammography Unit with tube stand with fully motorized C-Arm
- Image acquisition station with integrated X-Ray control
- Viewing and Reporting Diagnostic station (optional).

Mammograph FFDM is equipped with high frequency X-ray generator (5 KW), Tungsten X-ray tube with 2 focal spots and predisposed for the following image formats: 18x24 cm and 24x30 cm.

Breast image acquisition is based on solid-state detectors, featuring amorphous Silicon (a-Si) technology Cesium Iodide (CsI) scintillator or Amorphous Selenium (a-Se) detector (optional).

Quality and diagnostic content of image are improved with a particular compression device, softly curved and with smooth lines that grants for higher patient comfort and that can be both motor and manually driven.

Isocentric C-Arm version is usable for Stereo Biopsy in combination with SBD (Stereotactic Biopsy Device).

Digital technology not only allows for better images, as well as reducing times for achieving an X-ray image, it interfaces the system to the Hospital Informative System for scheduled workflow, patient information and images that, once acquired, can be directly send both to a DICOM printer and to the RIS.

Italray offers also a complete mammography solution optimized for 3D Breast Tomosynthesis: **Mammograph D-Tomo**.

This system is properly dedicated to three types of exams:

- Conventional mammography with a 24x30 cm format digital detector;
- Tomosynthesis scan;
- Conventional mammography and tomosynthesis scan with the same breast compression.

MAIN CARACHTERISTICS

X-RAY TUBE WITH BIANGULAR TUNGSTEN ANODE

Biangular anode reduces exposition times and consequently the risk of useless movements, so to obtain a best quality of mammographic images.

Tungsten anode together with Rhodium and Silver filters represents in digital mammography the optimal combination for the best image quality in two-dimensional exams.

Tungsten/Rhodium combination allows obtaining the minimum dose and the best quality image over all ranges of breast density.
Tungsten/Silver combination allows a further dose reduction (around 20%) for high-density breasts.
Tungsten/Aluminium is the optimal combination for Tomosynthesis exams.

ENHANCEMENT ALGORITHM FOR MAMMOGRAPHIC IMAGES

Mammograph FFDM/D-TOMO enhancement algorithm is specific for mammography to optimize the quality of acquired images.
This software processes acquired RAW images and displays them in "For Presentation" format to enhance breast tissue structures and reduce the noise. Customizations of this algorithm are possible with dedicated filters for geometric magnification and in case of prosthesis, metallic clips, and surgical markers, clusters of microcalcifications, breast specimens and surgical anatomical parts.

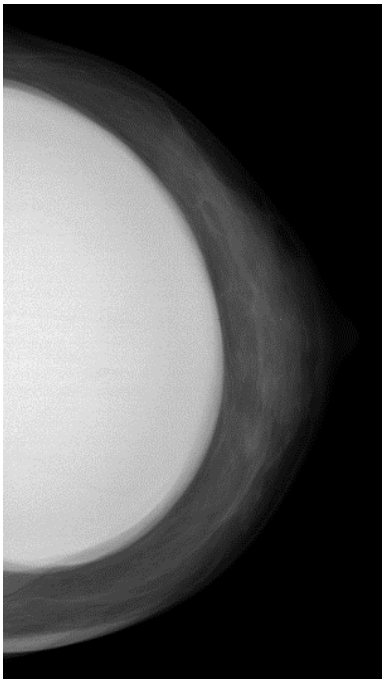

DOUBLE MODALITY FOR AUTOMATIC EXPOSURE CONTROL

PRE mode: *tissue composition* based. Parameters are evaluated by short X-ray exposure (1 mAs minimum) by reading a mosaic of 96 sensitive areas (ROI), automatically selected in function of breast size and projection
FAST mode: *compressed breast thickness* based. This modality can be used in special cases with breast implants and surgical metal aspects.

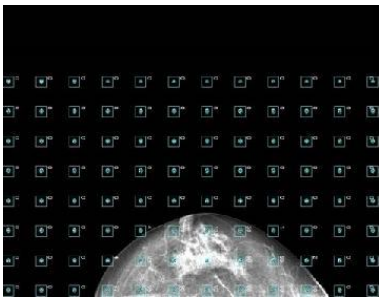

MAIN CARACHTERISTICS

X-RAY TUBE WITH BIANGULAR TUNGSTEN ANODE

Mammograph FFDM and Mammograph D-Tomo have a tool for calculating and displaying the Average Ghiandolar Dose. Dose value, in mGy, is displayed after every exposure both on the control panel and on the acquisition station monitor. It is also stored on the image DICOM header.

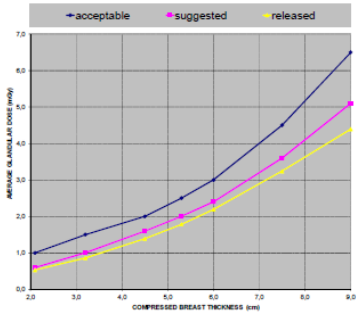

AUTOMATIC IMAGE TAGGING AND ACR TOUCHSCREEN DISPLAY

ACR code is a standard created by the American College of Radiology (ACR) to identify laterality, view, operative technique and other information on the mammographic image.
It is associated to each image basing on DICOM standard. Esso viene associato ad ogni immagine
Operator can associate codes that are not automatically set by the mammographic system, by means the 2 touch screen displays on both sided of the C-arm (MAMMO TSD).
These displays clearly visualize ACR code, C-arm rotation angle, compression force and compressed breast thickness.

COMPRESSION SYSTEM

For motorized compression, a dedicated microprocessor-controlled function automatically adapts compression force to breast density.
Compressor descending speed decreases as soon as a specific distance from the supporting surface is reached. Once in contact with breast the compressor briefly stops and starts to increase compression force. Basing on breast density the microprocessor controlled system evaluates if reaching the selected force value or if stopping the compression at 100 N.

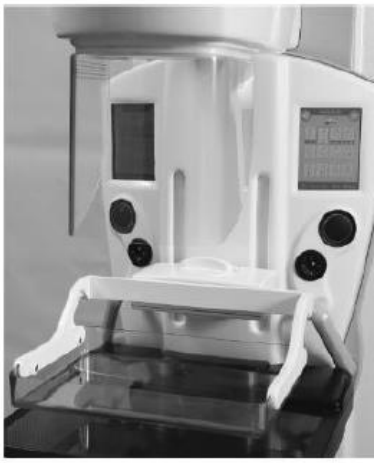

MAIN CARACHTERISTICS

3D IMAGE ACQUISITION (only for MAMMOGRAPH D-TOMO)

Tomosynthesis acquisition (3D images) can be with a Narrow Scan Angle (10°) for a **Standard mode** or with a Wide Scan Angle (36°) for a **High-resolution mode**. During breast scanning, images are acquired with detector native resolution (no binning).
In case of 3D exams, a dynamic system executes a **trapezoidal correction** of collimation to compensate the X-ray beam distortion during a tomo scan.

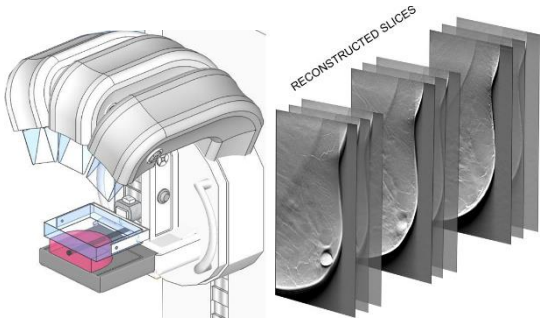

The **image reconstruction method** is based on a back-projection technique That also incorporates an iterative technique. It is an analytic method, generally used in CT and MRI that results fast and reliable.
The integration with an iterative technique allows to avoid dragging artefacts and improves noticeably the image quality.

3D AND 2D IMAGE ACQUISITION: COMBO MODE (only for MAMMOGRAPH D-TOMO)

Choosing the COMBO mode, the operator can acquire 3D+2D digital mammograms with an overall dose lower of "EUREF" limits for conventional mammography. In COMBO mode, the tomosynthesis scan is automatically followed by a 2D view during the same compression.

TECHNICAL SPECIFICATIONS: MAMMOGRAPHY UNIT

C-ARM (**only for MAMMOGRAPH FFDM**)	
F.D.D. (Focus Detector Distance)/S.I.D	66 cm
Manual rotation	± 180° (with disk brake)
Motorized rotation (*FFDM)	± 180° (CW, CCW continuous to any position)
Projection Preset positions	N° 5 Programmable projections (LAT, OBL, CC, OBL, LAT).
Rotation speed	11°/s with acceleration and deceleration ramp for smooth operation
Rotation angle display	On control panel and on auxiliary display (ACR)
Motorized Movements	Vertical movement
Range of Vertical Movement (from Floor)	From 43 cm to 128 cm (travel of 85 cm)
Speed of Vertical Movement	5 cm/s

ISOCENTRIC C-ARM (*FFDM) (**standard for MAMMOGRAPH D-TOMO**)	
F.D.D. (Focus Detector Distance)/S.I.D	66 cm
Manual rotation	± 180° with disk brake
Motorized Movements	Vertical movement. Rotation (*FFDM)
Motorized rotation (**)	± 180° (CW, CCW continuous to any position) (± 135° with C-Arm in the lowest position) +/- 15° Rotation (**only with SBD**)
Rotation speed	11°/s with acceleration and deceleration ramp for smooth operation
Projection Preset positions	N° 5 Programmable projections (LAT, OBL, CC, OBL, LAT)
Rotation angle display	On control panel and on auxiliary display (ACR)
Range of Vertical Movement (from Floor)	From 75 to 160 cm (travel of 85 cm)
Speed of Vertical Movement	5 cm/s

(*FFDM) Optional only for Mammograph FFDM

TECHNICAL SPECIFICATIONS: MAMMOGRAPHY UNIT	
EMERGENCY STOPS	
Number and Type	Two red push-buttons on both sides of mammography unit. One red push-button on Acquisition Workstation
Function	To Switch totally off the mammography System except Digital Flat Panel Detector
LATERAL CONTROL PANEL (**only for MAMMOGRAPH FFDM**)	
Position	On preferred side of mammographic unit (on request)
Technology	Microprocessor controlled with unique safety features, all functions under active operator control
Display type	GRAPHIC LCD Display 240x128 dots
Error messages	In several languages selectable (optional acoustic messages available)
Special features	Tube Thermal Unit display and active protection. Technical display for self-test and defective block identification, firmware release, exposure counter and last exposure time/date.
Diagnostic functions	Selectable service functions on LCD Display for hardware testing of each specific board with input status display, single status display and ON/OFF function.
AUXILIARY DISPLAY AND TAGGING KEYBOARD (**only for MAMMOGRAPH FFDM**)	
Display type	3 display (7 segments) + 18 Leds
Tagging Keyboard (ACR protocol)	10 pushbuttons: R/L laterality and prefixes/suffixes
Informations	C-arm rotation angle Compression breast thickness Compression force Laterality, Projection, ACR prefixes and suffixes.
CONTROL SWITCHES (**only for MAMMOGRAPH D-TOMO**)	
Number and Type	Four multiswitches (five push-buttons) on both sides of C-arm and X-ray tube
Control actions	Vertical movement of C-Arm Continuous rotation of C-Arm Switch-on of collimation light
MAMMO TSD: TOUCH SCREEN COLOUR DISPLAYS **(only for MAMMOGRAPH D-TOMO)**	
Number and type	Two TFT LED backlight resistive touch screens on both sides of C-Arm
Screen Size (aspect ratio)	5,7" (4:3)
Display resolution	640 x 480
Informations	Compression force Compressed breast thickness Patient name Projection angle Breast laterality ACR code Collimation format Magnification factor

TECHNICAL SPECIFICATIONS: MAMMOGRAPHY UNIT

COMPRESSION SYSTEM	
Compression paddle movement	Motor driven or manual with fine adjustment by double rotating controller
Compression paddles	24x30 cm shifted for 2D exams (normal breasts) 18x24 cm with lateral shifting for 2D exams (small breasts) 18x24 cm with lateral shifting for normal breasts 9x21 cm for magnification (*FFDM) Φ7,5 cm spot for contact examination Φ7,5 cm shifted for magnification examination 18x24 cm shifted for 2D biopsy 24x30 cm specific for tomo exams **(only MAMMOGRAPH D-TOMO)**
Compression Paddle Holder	Fast mechanical unlock with rotating knob. Right lock warning LED
Maximum free space available between Compression Plate and top cover of Potter-Bucky	325 mm with shifted compression paddles In Magnification Mode (straight compression paddle): x1,5 = 231 mm x1,8 = 191 mm x2 = 131 mm
Compression breast thickness display	Compression breast thickness displayed in mm
Compression Force	Adjustable from 70 to 200 N
Compression Force Display	Effective applied force with 1 N resolution
Compression paddle descent speed	4 cm/s at start. Proportionally decreasing during breast compression.
Maximum Compression Force Safety device	Triple safety device: electronic, electro-mechanical, mechanical
Soft compression paddle release after exposure	Selectable from control panel
Compression paddle aluminium equiv.	< 0.2 mm Al (0.135 mm Al≈30 kV)
Special function for 0 N compression force for oncology procedures	
CONTROLLERS FOR MANUAL COMPRESSION	
Number and type	Two rotating knobs with central push-button on both side of c-arm
FOOT-CONTROLS FOR MOTORIZED COMPRESSION	
Number and type	Two with two pedals and push-button **(only MAMMOGRAPH FFDM)** Two with four pedals and one pushbutton for motor driven compression unlock (*FFDM)
Control Actions	Vertical movement of Compression Paddle Motor driven compression unlock Vertical movement of C-Arm

(*FFDM) Optional only for Mammograph FFDM

TECHNICAL SPECIFICATIONS	D-TOMO	FFDM
X-RAY TUBE (IAE XM1016 T)		
Anode rotation speed	10.000 gg/min	3.000 gg/min - 10.000 gg/min (*FFDM)
Target material	RT-TZM	
Voltage	49 kV	
Minimum mAs	1 mAs	
Range of X-Ray Tube Voltage when X-Ray Tube Voltage is controlled by AEC (IEC 60601-2-45: 201.7.9.2.1.i)	20 - 49 kV	25 - 35 kV 25 - 40 kV (*FFDM)
Nominal X-Ray Tube Voltage and Highest X-Ray Tube Current available at that voltage (IEC 60601-2-45: 201.7.9.2.1.a)	**2D mode**: Large Focus: 49 kV; 80 mA Small Focus: 49 kV; 42 mA **TOMO mode**: Large focus: 49 kV; 140 mA	35 kV; 100 mA (@ 0,3 mm) 40 kV; 80 mA (@ 0,3 mm) (*FFDM)
Highest X-Ray Tube Current and Highest X-Ray Tube Voltage available at that current (IEC 60601-2-45: 201.7.9.2.1.b)	**2D mode**: Large Focus: 35 kV; 135 mA Small Focus: 35 kV; 65 mA **TOMO mode**: Large Focus: 35 kV; 200 mA	34 kV; 135 mA (@ 0,3 mm) 40 kV; 80 mA (@ 0,3 mm) (*FFDM)
Corresponding combination of X-Ray Tube Voltage and X-Ray Tube Current which results in Highest Electric Output Power (IEC 60601-2-45:201.7.9.2.1.c)	**2D mode**: Large Focus: 35 kV * 135 mA= 4725 W Small Focus: 42 kV * 55 mA= 2310 W **TOMO mode**: Large Focus: 35 kV * 200 mA= 7000 W	34 kV *135 mA (@ 0,3 mm) = 4590 W 40 kV *80 mA (@ 0,3 mm) = 3200 W (*FFDM)
Anode Heat Storage Capacity	300 kHU	
Maximum Anode Heat Dissipation Rate	60 kHU/min (750 W)	
X-Ray Tube Assembly Heat Storage Capacity	425 kHU	
Cooling method	Free air convection	
Anode Disc Target Angle	10° (small focus) - 16° (large focus)	
Focal spots	2	
Focal spot size according to IEC 336, EN60336	0,1 x 0,1 mm (small focus) - 0,3 x 0,3 mm (large focus)	
Nominal power	P_{max} (small focus) = 2,5 kW - P_{max} (large focus) = 9,6 kW	
X-Ray Window	0,5 mm Be	
Inherent filtration	0,0 mm Al IEC 522/1976	
HVL measured at 28 kV	>0,3 mm Al equiv.	
Total filtration	>0.5 mm Al	
Tube assembly thermal overload protection	Upper limit temperature 65° outside tube assembly (active temperature sensor). HU and °C display available in technical menu	
Filter	50 µm Rh - 50 µm Ag	50 µm Rh - 50 µm Ag - 500 µm Al 700 µm Al (*DTOMO)
Filter selection mode	Manual or Automatic	

(*FFDM) Optional only for Mammograph FFDM
(*DTOMO) Optional only for Mammograph D-TOMO

TECHNICAL SPECIFICATIONS	D-TOMO	FFDM
COLLIMATOR		
Light source	Led (Class 1 Device-320 µW power). ≥ 150 lux. Automatic switch ON when operating compression (selectable by service). Electronic timer	
Light beam collimation accuracy	According to IEC 60601-2-45:203. 8.5.4	
Mirror	With automatic out of field function	
Formats	24x30 cm for normal breasts 18x24 cm for small breasts 10x14 cm for magnification Trapezoidal dynamic for tomosynthesis	18x24 cm and 10x14 cm for magnification (with detector 18x24 cm format) 24x30 cm and 10x14 cm for magnification (with detector 24x30 cm format)
Protection of examination field	Protective screen to keep patient's face out of X-ray beam during bidimensional exams Extended protective screen to keep patient's face out of X-ray beam during tomosynthesis exams	Fast lock and extended protective screen to keep patient's face out of X-ray beam
X-RAY HIGH VOLTAGE GENERATOR		
Frequency	100 kHz	
Generator Output Power	7,4 Kw (@37 kW)	5 kW (@ 35 kV)
Ripple	< 2%	
kV range	20 - 49 kV Resolution: 0,5 kV (manual and automatic). Precision: ±1%. Repeatability: ±0,1%.	20 - 35 Kv 20 – 40 kV (*FFDM) Resolution: 0,5 kV (manual and automatic). Precision: ±1%. Repeatability: ±0,1%.
kV display	XX,X kV (3 digits)	
mAs range	1 - 640 mAs Resolution : 0,1 mAs (automatic)	
mAs values (R'20)	1, 2, 3, 4, 5, 6, 7, 8, 9, 10, 13, 16, 20, 25, 32, 40, 50, 63, 80, 100, 130, 160, 180, 200, 250, 300, 400	
mAs display	XXX.X mAs (4 digits)	
Exposure Time range	0.02/4.7 s (640 mAs @135 mA). Automatically selected in function of selected mAs	
Safety timer	10 s	
AUTOMATIC EXPOSURE CONTROL		
Controlled parameters	Auto kV / Auto mAs (**Zero Point Mode**) Manual kV / Auto mAs (**One Point Mode**)	
Auto parameters selection criteria	Dual mode: PRE and FAST **PRE**: tissue composition based (parameters evaluated by short X-Ray exposure) **FAST**: compressed breast thickness based	
Sensitive area (only for PRE mode)	Mosaic of 96 areas of detector automatically selected in function of breast size and projection	
DOSE CALCULATOR		
Method of Calculation	Average Glandular Dose (AGD) according to: "D.R. Dance et al."	
Data visualization (mGy)	ON Control Panel (only for **MAMMOGRAPH FFDM**) On Acquisition Work Station	
Method of recording	Image Header (DICOM)	
AGD with a 4 cm PMMA phantom	1,216 mGy (2D acquisition)	
Dose limits	According to European Protocol for Dosimetry and EUREF protocol	

(*FFDM) Optional only for Mammograph FFDM

TECHNICAL SPECIFICATIONS

DIGITAL IMAGING SYSTEM

DIGITAL FLAT PANEL DETECTOR	Amorphous Silicon detector (a-Si)	Amorphous Selenium detector (a-Se) (*)
Type	Indirect conversion digital detector	Direct conversion digital detector
Technology	Amorphous Silicon (a-Si)	Amorphous Selenium (a-Se)
Scintillator	CsI	-
Format (ISO 4090)	24 x 30 cm	18 x 24 cm, 24 x 30 cm
Case dimensions	35,9 x 34,6 cm	27,8 x 26,8 cm (18 x 24 cm format) 35,9 x 34,6 cm (24 x 30 cm format)
Resolution	2816 x 3584	2016 x 2816 (18 x 24 cm format) 2816 x 3584 (24 x 30 cm format)
Active Area	23,9 x 30,5 cm	17,2 x 23,9 cm (18 x 24 cm format) 23,9 x 30,5 cm (24 x 30 cm format)
Depth	16 bit	
Pixel Pitch	85x85 µm	
Dimensioni pixel nelle immagini 2D sintetiche	85x85 µm	
Top Cover	Carbon fiber 0.1 mm Al equivalent	
Cooling method	Air + Fan (integrated)	
Fill factor	> 80%, geometric	> 88%, geometric
DQE (typ.)	> 45% @ 1 lp/mm > 10% @ 5 lp/mm	> 50% (@ 1 lp/mm for 28 kV exposure) > 20% (@ 5,8 lp/mm for 28 kV exposure)
MTF	> 75% @ 1 lp/mm > 10% @ 5 lp/mm	> 90% @ 1 lp/mm > 40% @ 5,8 lp/mm
Spatial resolution	7 lp/mm	

GRID FOR MAMMOGRAPH FFDM

Potter bucky 24x30 cm	R6; 36 lines/cm. Linear, Vibrating.

GRID FOR MAMMOGRAPH D-TOMO

Potter bucky 24x30 cm	R5; 102 lines/cm. Linear, Vibrating.

DEVICE FOR GEOMETRIC MAGNIFICATION (*)

Type	Gridless interchangeable with potter-bucky
Magnification ratio (variable)	x1,5 / x1,8/ x2
Small focus selection	Automatic once fitted

(*) Optional

TECHNICAL SPECIFICATIONS	D-TOMO	FFDM
ACQUISITION STATION		
HARDWARE		
Hard-disk	Hard disk for Operative System: 128 GB SSD Hard disk image storage: SATA 1 TB	Hard disk for Operative System: SATA 1 TB Hard disk image storage: SATA 1 TB
Processor	Intel Core i7 2600 3,4 GHz	
RAM	16 GB	8 GB DDR3-1333
CD/DVD	Yes (*). Integrated 48x SATA DVD +/- RW DL	
Operative system	Windows Embedded standard 7	Windows 7 Professional 64-bit
Network	100/1000 MB/s	
UPS	Yes (*). Emergency power unit system (650 VA) that grants for safe and controlled switch off preventing any data loss or damage.	
Image storage capacity	~25.000 images (no compression).	
POINTING AND SELECTION DEVICE (only for MAMMOGRAPH D-TOMO)		
Type	Trackball with scroll ring Four customizable buttons	
Technology	Optical tracking	
SOFTWARE		
Image Display Time on Acquisition Station	**2D mode**: < 15 s **TOMO mode** – thickness of 50 mm: < 25 s (+11 s of loading time for scan angle of 15°) < 25 s (+13 s of loading time for scan angle of 24°) < 25 s (+19 s of loading time for scan angle of 36°)	
Time Between Two Consecutive Images Acquisition	**2D mode**: < 20 s **TOMO mode** – thickness of 50 mm: < 25 s (+11 s of loading time for scan angle of 15°) < 25 s (+13 s of loading time for scan angle of 24°) < 25 s (+19 s of loading time for scan angle of 36°)	
Enhancement algorithm	Specific for mammography to optimize the quality of acquired images	
Dedicated filters	For geometric magnification and in case of prosthesis, metallic clips, surgical markers, clusters of microcalcifications, breast specimens and surgical anatomical parts	
Post processing	Zoom, Pan/Scroll, Lente, Window/Level, Contrast, Histo, Restore original, AOI operations, Anchor Point, Measures, Lens .	
Quality check	Tool for periodic calibration and quality check according to EUREF protocols (March 2014).	
Images compression format	JPEG LOSSLESS (JL) - JPEG 2000 LOSSLESS (J2L)	
Images saving/export format	DICOM FOR PROCESSING FFDM - DICOM FOR PROCESSING (TOMO projections)	

(*) Optional

TECHNICAL SPECIFICATIONS

ACQUISITION STATION

TOMOSYNTHESIS (only for MAMMOGRAPH D-TOMO)	
Tomosynthesis acquisition time	**Option S:** 10 s (with scan angles of 15°) 12 s (with scan angles of 24°) 18 s (with scan angles of 36°) **Option F:** 5 s (with scan angles of 15°) 6 s (with scan angles of 24°) 9 s (with scan angles of 36°)
Pixel dimension in tomosynthesis reconstructed slices	85 x 85 µm (with any scan angle)
Pixel dimension in synthetic 2D images	85x85 µm
Number of X-Ray exposures (projections)	11 (with scan angles of 15°) 13 (with scan angles of 24°) 19 (with scan angles of 36°)
Reconstruction method	Back-projection technique with incorporated iterative technique to improve image quality
Distance between reconstructed slices	1 mm

NETWORKING

DICOM Functions	
DICOM Storage (SCU)	Send Image to PACS
DICOM Modality worklist (SCU)	Interface with HIS / RIS with auto refresh option
DICOM Print (SCU)	Support DICOM printers
IHE Integration profiles	
Scheduled Workflow	Acquisition Modality : Patient Based Worklist Query / Assisted Acquisition protocol Setting / PPS Exception Management
Patient Information Reconciliation	Acquisition Modality

(*) Optional

TECHNICAL SPECIFICATIONS		
MONITOR	2 MP	3 MP (*)
Type	TFT LCD IPS	TFT LCD IPS
Size	21,3”	21,3”
Recommended resolution	1600 x 1200 pixel	2048 x 1536 pixel
Contrast	1500:1 tip.	750:1
Brightness	440 cd/m^2 max	800 cd/ m^2
TOUCH SCREEN COLOUR DISPLAY (**only for MAMMOGRAPH D-TOMO**)		
Technology	Active matrix TFT LCD	
Screen Size (aspect ratio)	15” (4:3)	
Display Resolution (pixels)	1024x768	
Colours	16,2 million with dithering	
Brightness	250 cd/m^2	
Contrast ratio	500:1 max	
ANTI-X PROTECTIVE BARRIER		
Type	Integrated	
Pb equivalence	> 0,34 mm Pb (@ 35 kV)	
Dimensions	85,7 x 200,3 x 64 cm	
Glass thickness	2 cm	

(*) Optional

TECHNICAL SPECIFICATIONS

REVIEW STATION (*)

HARDWARE		
Hard-disk	2x1 TB SATA (7.000 rpm)	
Processor	Intel Xeon Quad Core 3,00 GHz 10 MB cache	
RAM	8 GB DDRIII-1600 MHz	
CD/DVD	8x SATA DVD +/-RW DL	
Operative system	Windows 7 Professional 64-bit	
Graphic card	ATI MED X 3900 (very high resolution display system) NVIDIA Quadro (colour service monitor)	
UPS	650 VA	
Image storage capacity	~25.000+25.000 images	
MONITOR	2 MP (colour service monitor)	2 x 5 MP (very high resolution) (*)
Type	COLOR LED	Monochrome, LCD Panel (IPS)
Size	21,5" (16:9)	21.3"
Recommended resolution	1920 x 1080 pixel	2048x2560 pixel
Contrast	1000:1	1200:1
Brightness	200 cd/m^2	1200 cd/m^2 max

(*) Optional

TECHNICAL SPECIFICATIONS

INSTALLATION DATA

Power supply	220/230/240Vac ±10% 50/60Hz (115 Vac ±10% 50/60 Hz [*])
FFDM mammographic unit	DIMENSIONS: 70 x 115,8 x 200 cm WEIGHT: 300 kg
D-Tomo Mammographic unit	DIMENSIONS: 70 x 125 x 200 cm WEIGHT: 355 kg
Acquisition station	DIMENSIONS: 85,7 x 64 x 200,3 cm WEIGHT: 150 kg

ENVIRONMENTAL CONDITIONS

OPERATING	MAMMOGRAPHIC UNIT	a-Se DETECTOR	a-Si DETECTOR
Temperature Humidity Atmospheric Pressure	+20°C ÷ +75°C 10% ÷ 90% 500 mbar ÷ 1060 mbar	+20°C ÷ +25°C 30% ÷ 75% 700 mbar ÷ 1060 mbar	15°C ÷ +35°C 30% ÷ 75% 700 mbar ÷ 1060 mbar
TRANSPORT AND STORAGE	MAMMOGRAPHIC UNIT	a-Se DETECTOR	a-Si DETECTOR
Temperature Humidity Atmospheric Pressure	+20°C ÷ +70°C 10% ÷ 90% 500 mbar ÷ 1060 mbar	-20°C ÷ +40°C 10% ÷ 90% 700 mbar ÷ 1060 mbar	-20°C ÷ +60°C 10% ÷ 85% 700 mbar ÷ 1060 mbar

[*] Optional

SIZE AND DIMENSIONS

MAMMOGRAPH FFDM

FRONTAL VIEW	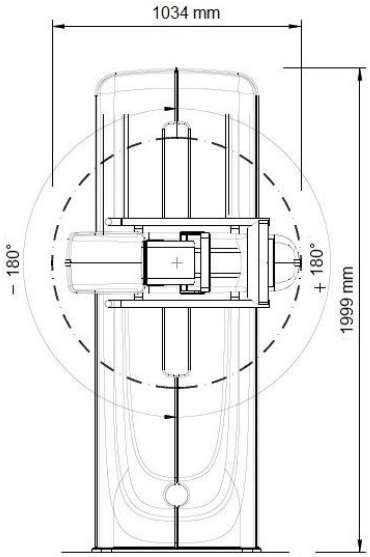	
LATERAL VIEW	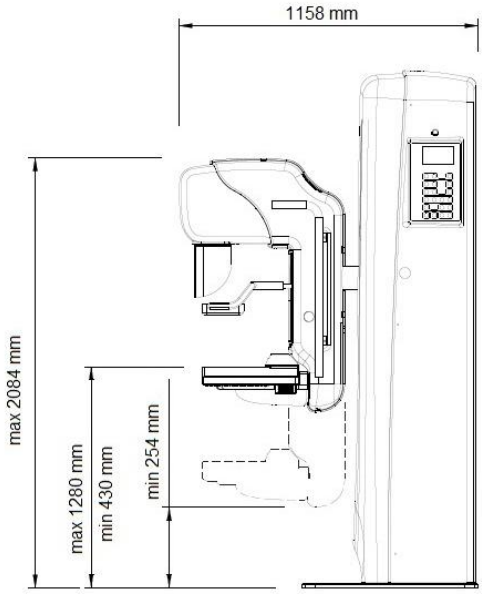	
TOP VIEW	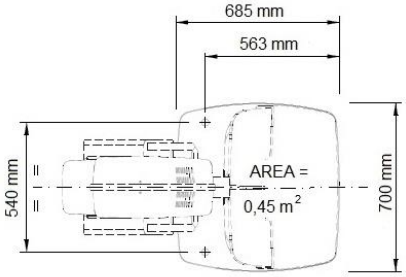	

SIZE AND DIMENSIONS

MAMMOGRAPH D-TOMO

FRONT VIEW	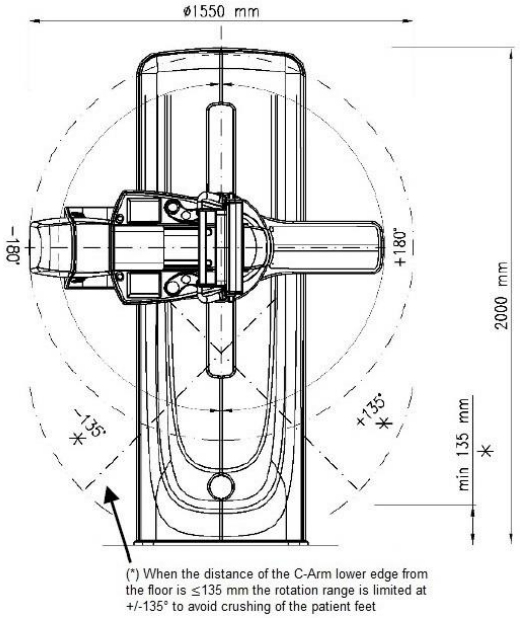	
LATERAL VIEW	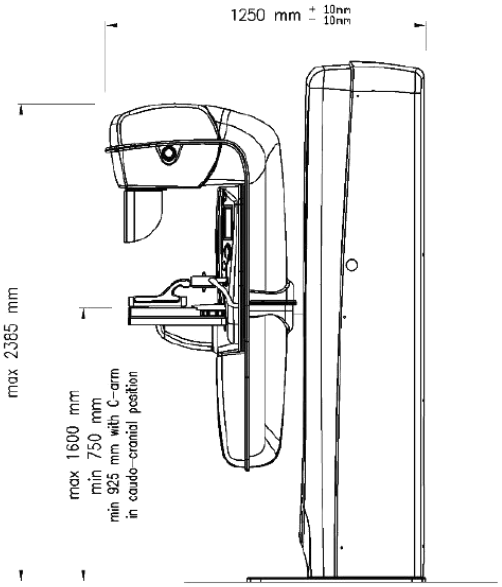	
TOP VIEW	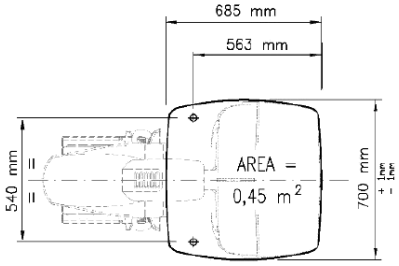	

SIZE AND DIMENSIONS

ACQUISITION STATION

FRONTAL VIEW	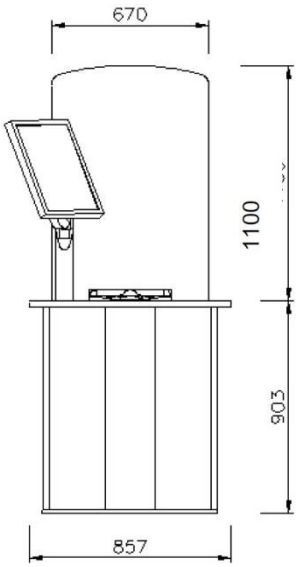	
LATERAL VIEW	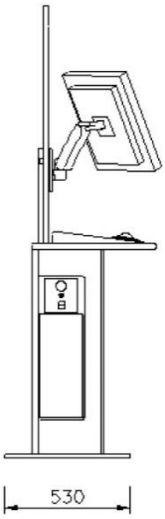	
TOP VIEW	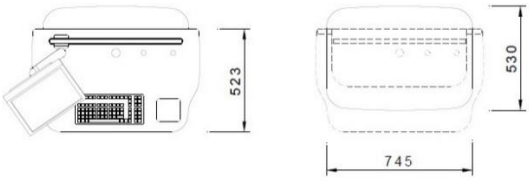	

ACCESSORIES

WORKSTATION FOR EXAM REVIEW AND SCREENING (*)		
Expert viewing methodology (TABAR's systematic viewing masks) and comparison between images to enhance perception of subtle abnormalities	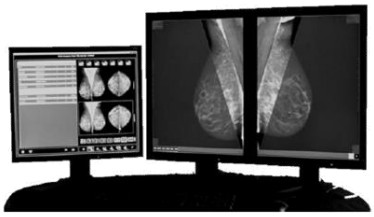	
COMPUTER AIDED DETECTION (CAD) MAMMOGRAPHY SYSTEM (*)		
This tool helps the operator to identify and distinguish breast injuries. It is based on a wide database of clinical cases previously analysed by radiology experts helps the operator to identify and distinguish breast injuries.	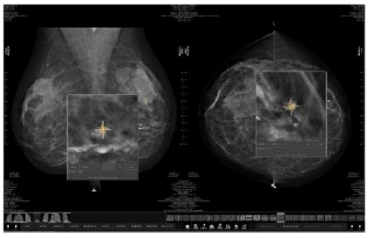	
STEREOTACTIC BIOPSY DEVICE (*)		
2 plane biopsy view (+/-15°) to identify breast injury depth. Software suggests the operator the best needle length to exactly reach lesion for taking the requested sample	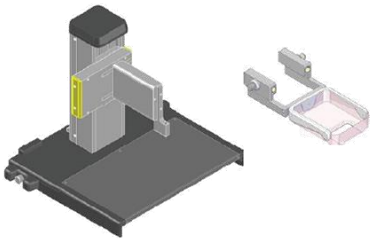	Automatic recognition of the biopsy device adaptor. Automatic guided biopsy procedure

(*) Optional

CERTIFICATION, INSTALLATION AND WARRANTY

CERTIFICATION

According to European Directive 93/42 CEE Mammograph FFDM and Mammograph D-Tomo are class II b device, they have been developed in compliance with the UNI EN ISO 9001:2008 and UNI EN ISO 13485:2012. Moreover, they comply with the following Technical Norms: CEI EN 60601-series

INSTALLATION

Only authorized technical personnel that has been appropriately trained by ITALRAY can install Mammograph FFDM and Mammograph D-Tomo. Upon request, ITALRAY Installation Office can prepare system installation layouts (including eventual construction/electrical)

WARRANTY

ITALRAY guarantees its products for one year from the delivery date. ITALRAY can offer to its customers a wide range of service plans that will perfectly fit all needs and preferences

italray
Your X-ray Solution

Via Del Parlamento Europeo 9/D 50018 Scandicci
Firenze
Tel. +39/055/7228511 fax. +39/055/7228512

info@italray.it
italray.it